GANG-NAIL®

CRT
Cork Roof Truss Company

Roof Trusses

BUILDING DESIGNER GUIDE

…The Purpose of this Document is to Identify to the Building Designer the Critical Information Required to Complete a Roof Truss Design.

CONSTRUCTION

Table of Contents

Recommended Drawings

First Floor Construction Plan

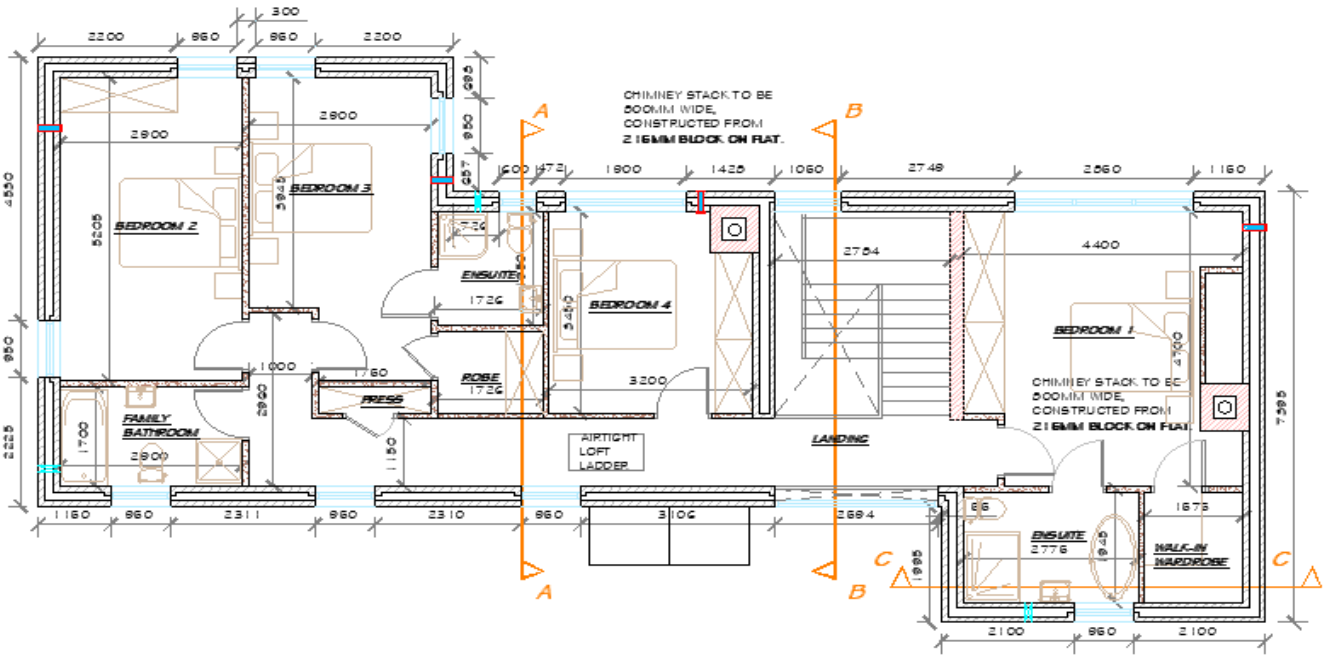

Plans need to show dimensions to all walls and features that could affect the roof design. Roof plans are used for guidance by the designer. They should show roof pitches, any span direction requirements, and walls that are intended to be built up into the roof space. They should also show other features that impact on the roof, such as attic hatches, chimneys, water tanks, skylights, SVP's and attic spaces.

Roof Schematic Drawing

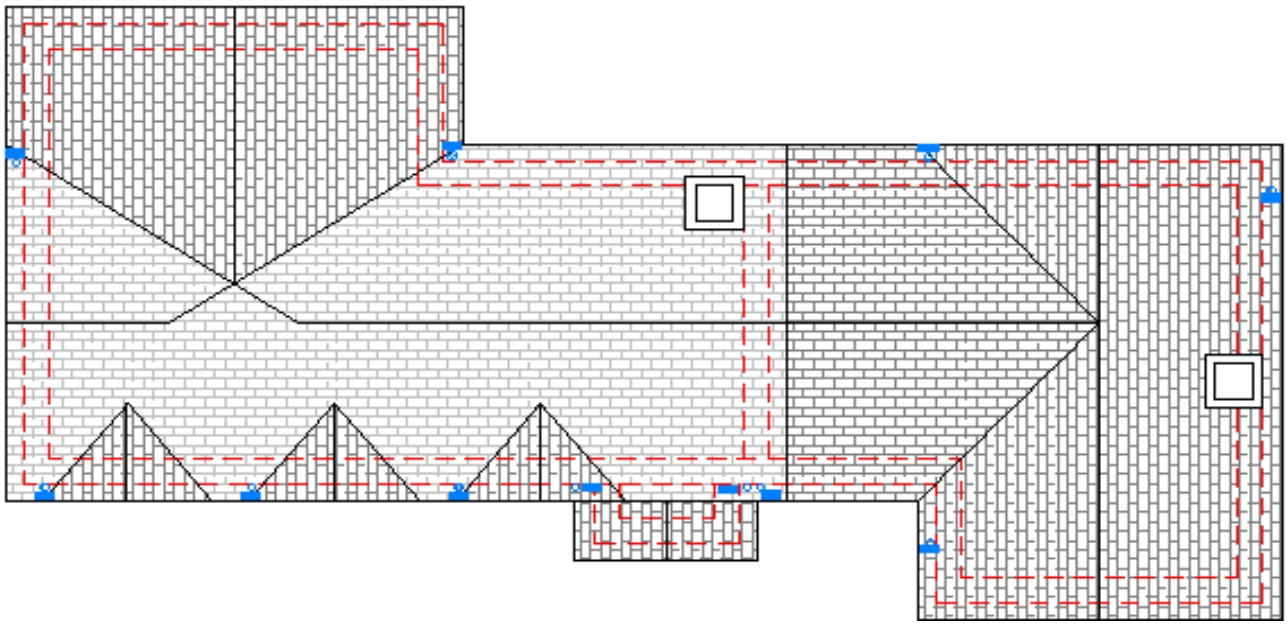

Section Drawings

Section drawings are critical for the roof designer to get an understanding of the roof requirements. They should show floor, ceiling & ridge heights. In addition, they should show the supporting wall & eaves levels. Sections also give an indication of the loading on a roof by showing roof coverings & insulation depths. Roof truss centres may also be specified on section drawings.

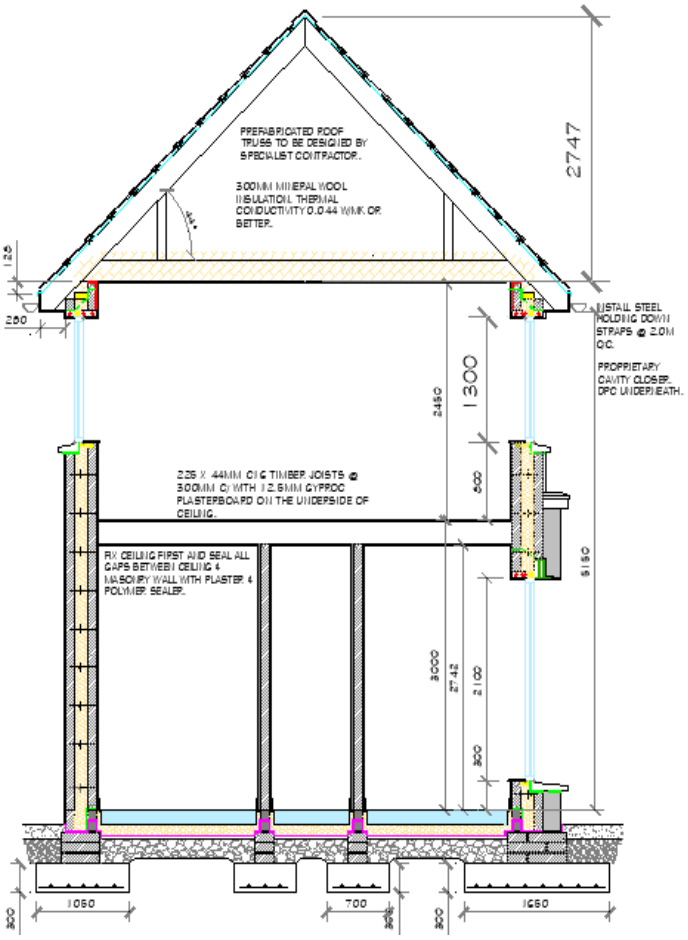

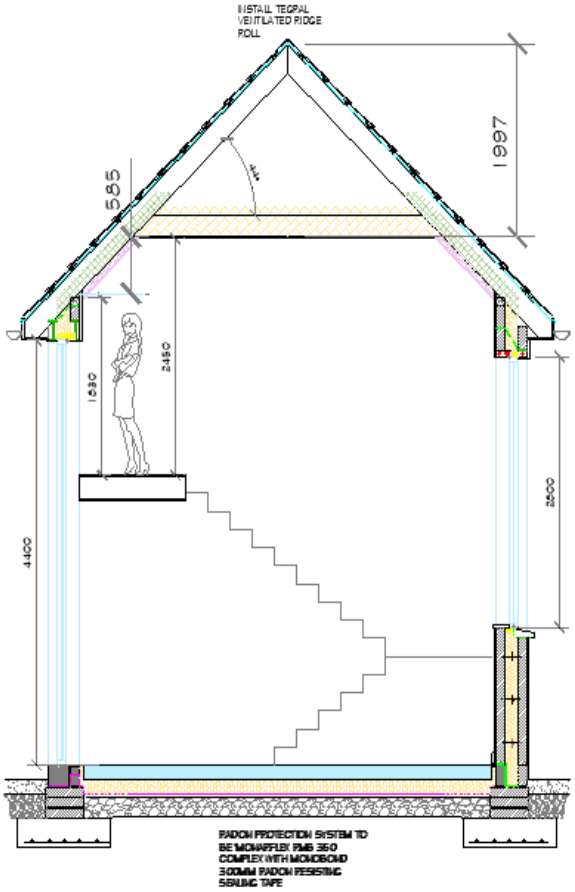

Eaves Detail

Eaves information is crucial for the designer to be able to set out the roof correctly. The architectural detail (below left) clearly establishes the critical setting-out dimensions for the truss designer to create the desired eaves detail for the roof trusses (below right).

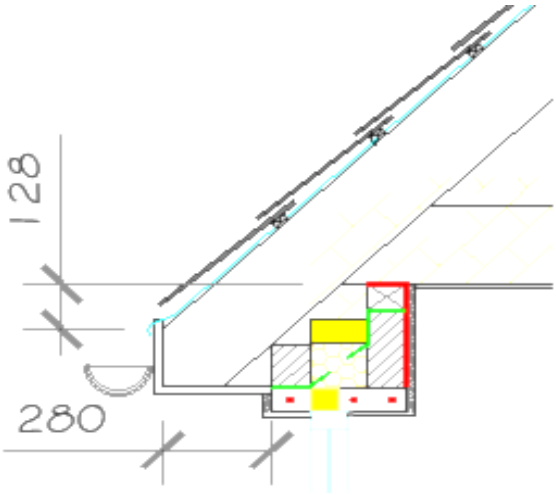

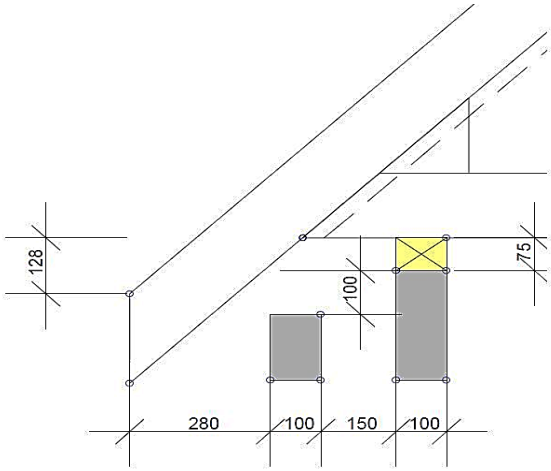

A roof truss design can only be generated by a truss designer once correct eaves details have been provided. Variations to the cavity width and thickness of cladding to the external face need to be taken into consideration when the roof truss setting out is being determined. If there is a specific rafter size required, this should be shown and noted also.

Eaves details should contain the following:

- Wall plate size and positioning
- Wall plate level and height
- Cavity wall make-up and any external cladding
- Roof pitch
- Soffit width
- Soffit height
- Indication of structural ceiling level (underside of truss)
- Setting out Dimension
  Either:
  The vertical dimension from end of overhang to wall plate level
  or
  The vertical dimension from top outside corner of wall plate to top of rafter

Elevations

Elevations are used primarily as a cross check on all the other information supplied. They are used to confirm roof pitches, eaves heights and roof features like chimneys and skylights. On housing sites with multiple standard house types, street elevations are often required to observe how adjacent houses interact.

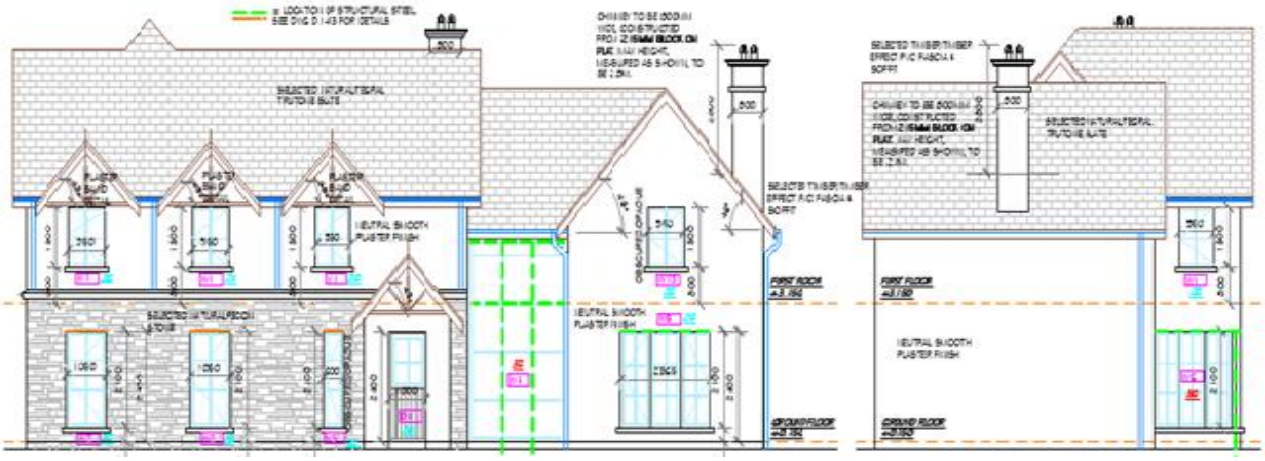

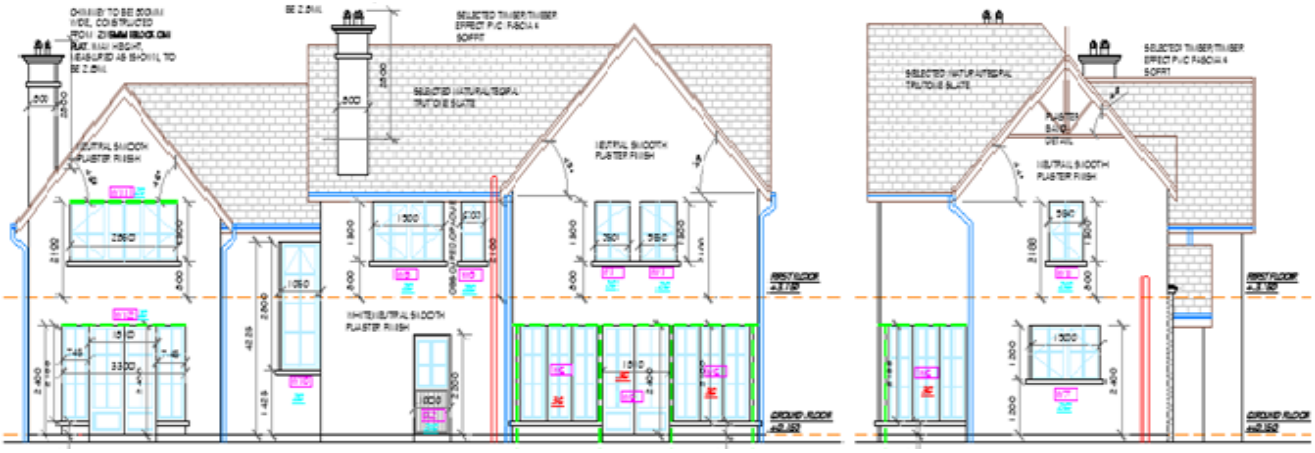

Features & Penetrations

Chimneys

It's necessary to specify the size and positioning of chimney shaft(s) in a roof.

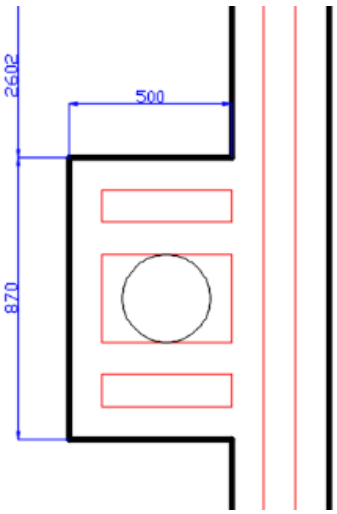

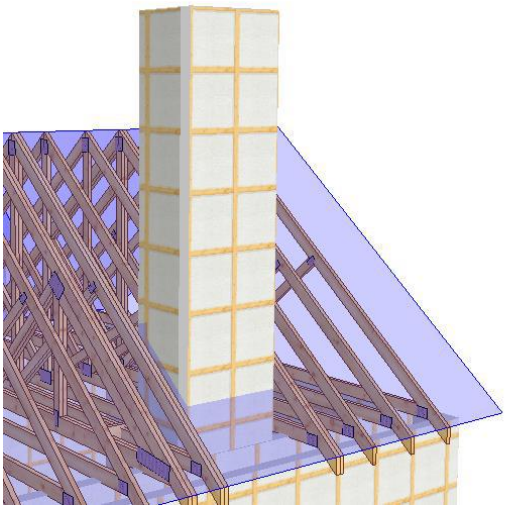

Stairwells

Where a staircase is desired to access the attic space in a roof it's necessary to specify the:

- Stairwell positioning
- Stairwell opening size
- Ascending direction of staircase
- Support positions (if required) at the top of the staircase

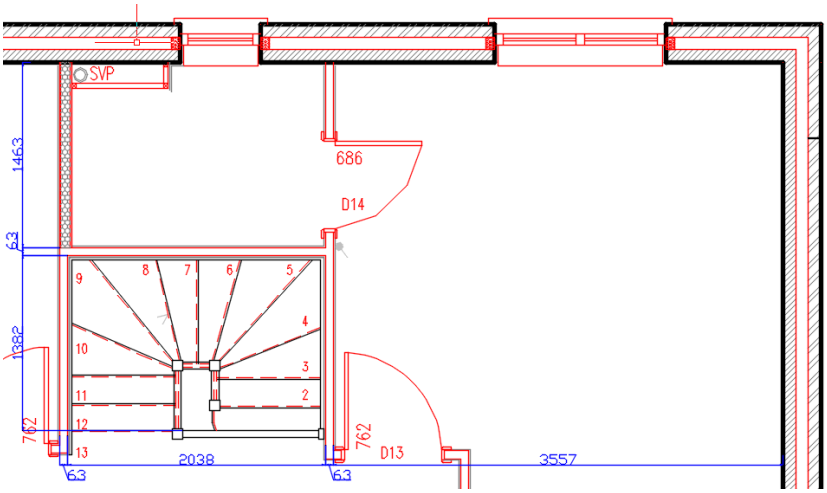

Skylights

Where skylight openings are desired it's necessary to specify the:

- Size of roof light
- Position of the opening on plan
- Position on the slope

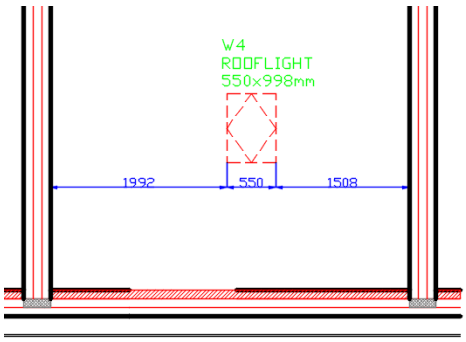

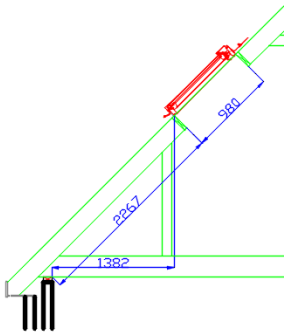

Dormer & Attic Space

Where openings are desired, it's necessary to specify the:

- Position of attic walls on plan
- Position of dormer walls on plan
- Position of window on plan
- Dormer shape and pitch
- Height of attic ceiling
- Height of dormer ceiling

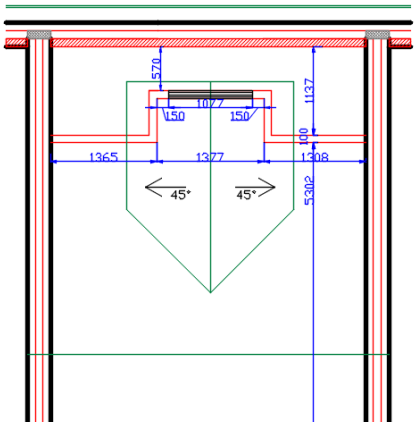

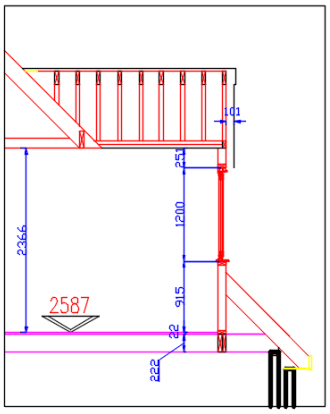

Water Tanks

Where water tanks need to be accommodated it is necessary to specify the:

- Position of the tank
- Geometry of the tank
- Maximum weight of the tank

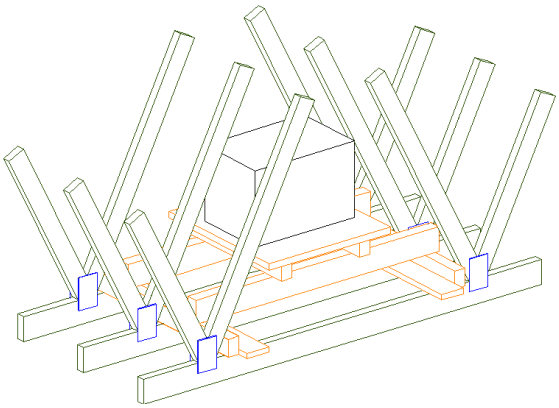

Attic Hatches

Where access hatches to the attic space are desired it is necessary to specify the:

- Dimensions of the hatch
- Positioning of the hatch on plan

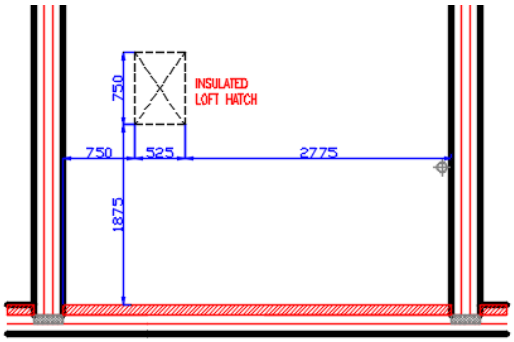

Building Designer Responsibility

Building Restraint & Bracing

The roof designer takes responsibility for the bracing of the *roof structure*. The bracing of the *building* and therefore the connection of the roof to the structure is also the responsibility of the building designer.

Loadings

It is the building designer's responsibility to inform the roof designer of all the loads being applied to the roof structure. The building designer should review the design to ensure the truss designer has accounted for all necessary loadings. In the case of nursing homes or hospital roofs, it is important to specify any required **hoist loads** on the trusses.

Connection of Timber Roof Structure to Building

Specifying connections from the roof structure to the building is the responsibility of the building designer. They should ensure that all actions from wind on a building/roof have been considered. Any connection from the roof structure to the building must be reviewed and confirmed by the building designer.

Habitable Space in Dormer Roofs

If the attic space is intended as habitable living space in the property it is critical at concept stage to ensure the below requirements are fulfilled. This may influence the external wall set-out or the pitch of the roof.

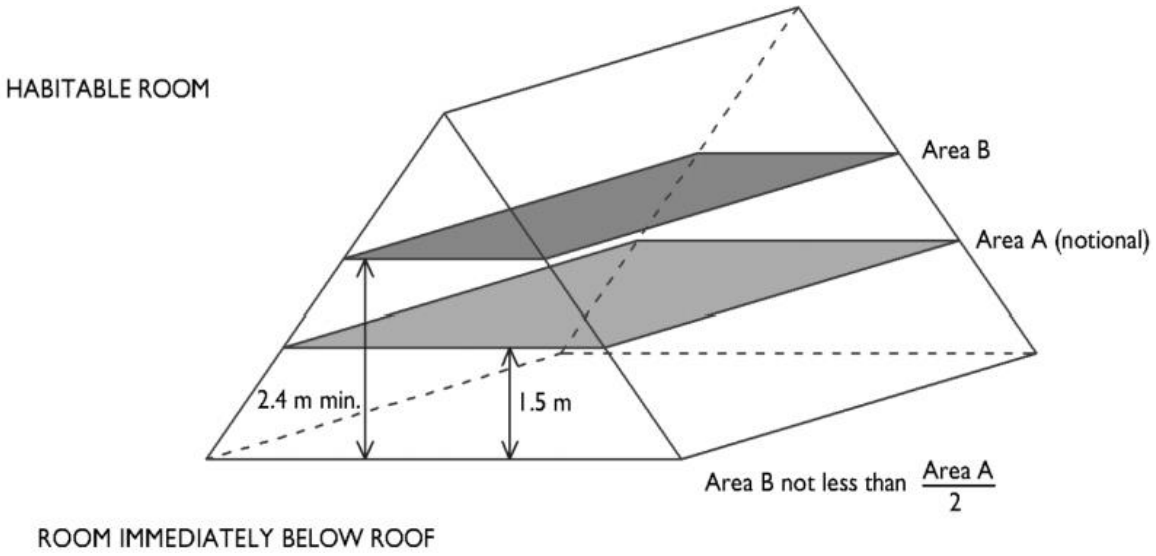

Considerations

Specifications

Inclusion of client specification documents are important to enable the designer to obtain critical information that could have a significant influence of the design and price of a structure, for example:

- Treatment requirements
- Timber and metalwork specifications
- Truss spacing

Transport Constraints

It is important for a designer to be aware of delivery constraints. Typically, if a large truss must be delivered on a rigid vehicle then the truss is specially modified for transportation purposes. This could have an implication on the cost of trusses and/or the erection procedure.

Examples of transportation limits for typical articulated & rigid lorries are illustrated below:

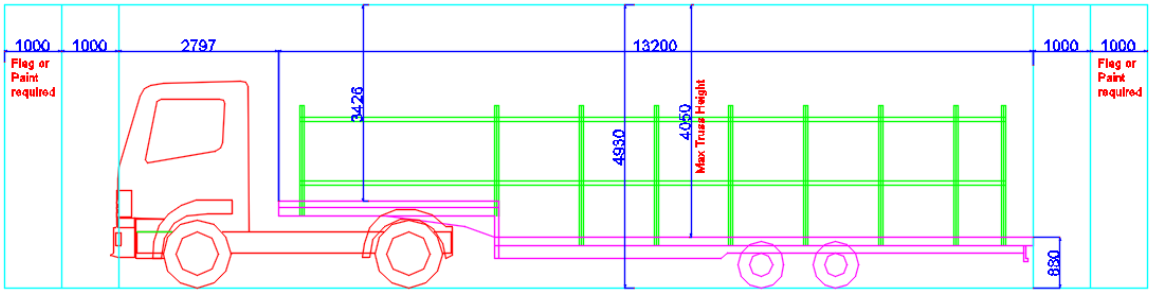

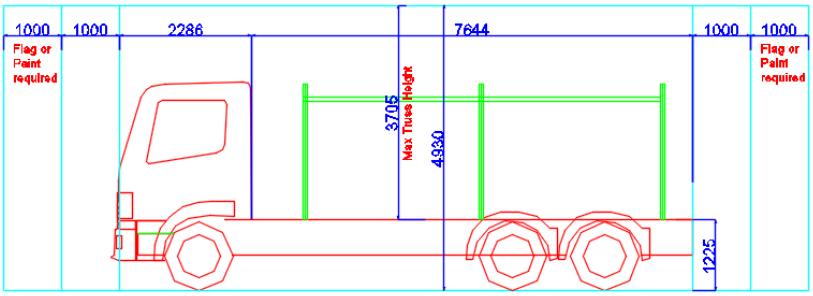

Because of these transport height restrictions, 'top-hat-trusses' are often required to be used. This means the top section of the truss must be re-fixed on site using 'field-splice-plates'.

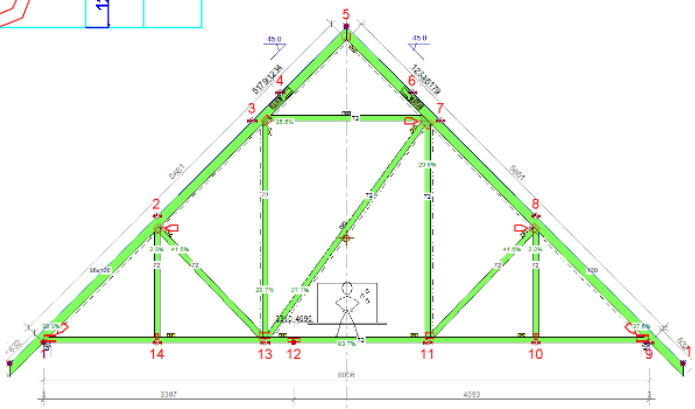

CONSTRUCTION PRODUCTS

Gang-Nail Technical Support

3rd Floor Westmead House
Farnborough
Hampshire
GU14 7LP
United Kingdom

t : +44(0)1252 551960
f : +44(0)1252 543436

Customer Services (GB manufacturers)

1 Wheatstone Place
Southfield Industrial Estate
Glenrothes Fife
KY6 2SW
United Kingdom

t : +44(0)1592 771132
f : +44(0)1592 771182
e : orders@itwcp.com

Alpine Technical Support

1st Floor, Unit 1a Penrose House
Treleigh Industrial Estate
Redruth
Cornwall
TR16 4AX
United Kingdom

t : +44(0)1872 245456
f : +44(0)1872 245451
e : helpdesk@itwcp.com

A division of ITW Limited

Registered in England No. 559993

www.itwcp.com